SEQUENCE OF OPERATION:

-AT REST, BOTH DOORS ARE UNLOCKED WAITING FOR A CYCLE TO BEGIN

-OPENING OF EITHER DOOR WILL LOCK OPPOSITE DOOR TO AVOID BOTH DOORS BEING OPEN AT THE SAME TIME

-OPENING DIRTY SIDE DOOR WILL LOCK CLEAN SIDE DOOR AND TURN THE LOCK STATUS INDICATOR RED

-MATERIAL WILL BE LOADED INTO PASS-THRU AND DOOR WILL BE CLOSED.

-ONCE THE DIRTY SIDE DOOR IS CLOSED, THE BOTH DOORS WILL LOCK WITH LOCK STATUS INDICATORS RED AND THE AIR PURGE CYCLE WILL BEGIN WITH THE AIR PURGE INDICATOR YELLOW.

-ONCE THE AIR PURGE CYCLE IS COMPLETE AIR PURGE INDICATOR WILL TURN OFF, BOTH DOORS WILL UNLOCK AND THE LOCK STAUS INDICATORS WILL TURN GREEN

-TECHNICIAN WILL OPEN THE CLEAN SIDE DOOR WHICH WILL LOCK THE DIRTY SIDE DOOR AND TURN THE LOCK STATUS INDICATOR RED

-ONCE THE CLEAN SIDE DOOR IS CLOSED, BOTH DOORS WILL LOCK AND BOTH LOCK STATUS INDICATORS WILL TURN RED AND THE AIR PURGE CYCLE WILL BEGIN WITH THE AIR PURGE INDICATOR YELLOW.

-ONCE THE AIR PURGE CYCLE IS COMPLETE THE AIR PURGE INDICATOR WILL TURN OFF, BOTH DOORS WILL UNLOCK AND THE LOCK STATUS LIGHTS WILL TURN GREEN

-FAN FILTER UNIT TO START RUNNING WHEN EITHER DOOR IS OPENED AND WILL SHUT OFF ON COMPLETION OF TIMED PURGE CYCLE

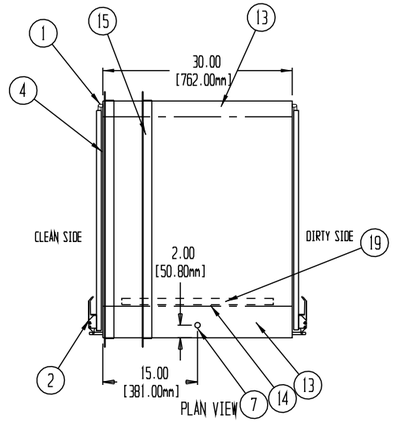

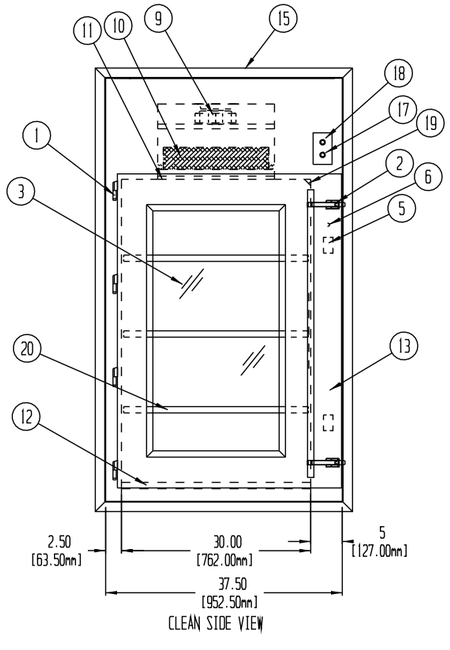

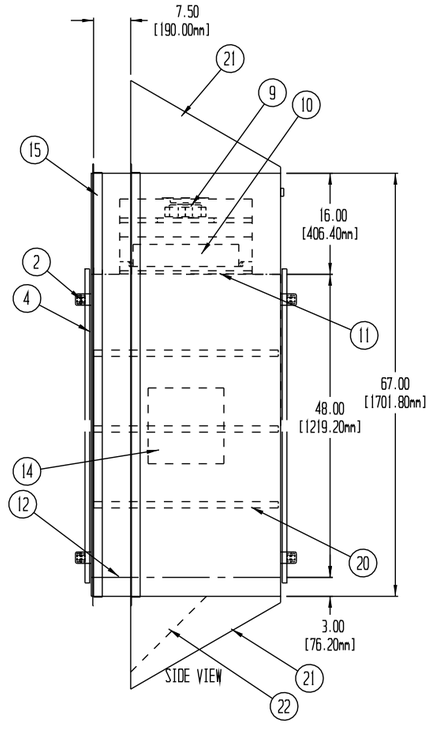

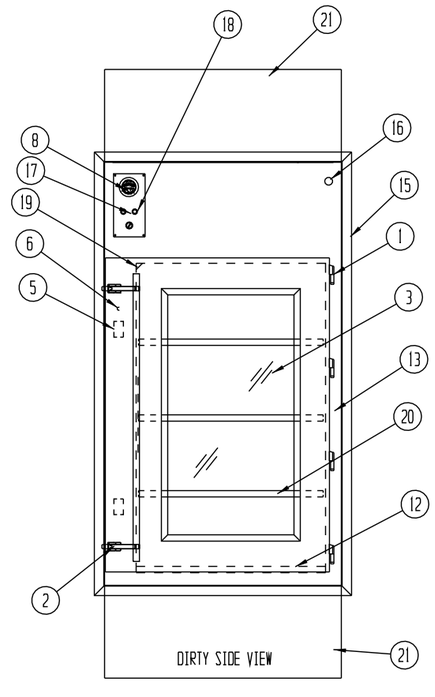

NOTES:

- UNIT TO BE CONSTRUCTED OF 16 GA. TYPE 304 STAINLESS STEEL WITH A #4 FINISH

- UNIT TO BE DOUBLE WALL CONSTRUCTION

- CUSTOMER TO PROVIDE 115 VOLT, 2.4 AMP POWER SOURCE TO UNIT

- ROUGH OPENING SIZE SHOULD BE 1/4" TO 1/2" LARGER THAN UNIT SIZE

- AIR PURGE CYCLE WILL START IMMEDIATLEY AFTER THE DOOR IS CLOSED

-BLOWER AND FILTER ARE TOTALLY ENCLOSED WITHIN UNIT CABINET

-AUTO MODE OPERATES AIR PURGE CYCLE IN BOTH DIRECTIONS AND INTERLOCK

-OFF MODE WILL ONLY OPERATE INTERLOCK. NO HEPA FILTRATION OR PURGE CYCLE

-MANUAL MODE WILL OPERATE INTERLOCK AND HEPA FILTRATION CONTINUOUSLY

-AIR PURGE ON ADJUATABLE TIMER LOCATED BEHIND #14 CONTROL ACCESS COVER

5 UNITS REQUIRED AS SHOWN

TAGS:

A1: ROOM #5-01 TO ROOM #5-04
A2: ROOM #5-01 TO ROOM #5-08
A3: ROOM #5-01 TO ROOM #5-09
A4: ROOM #5-01 TO ROOM #5-12
A6: ROOM 6-02B TO ROOM #C-09

REVISIONS			
REV	DESCRIPTION	DATE	APPROVED
A	CHANGES PER CUSTOMER REVIEW	10/10/23	
B	NOTE CORRECTIONS	11/2/23	
C	CHANGES PER CUSTOMER REVIEW	1/18/24	
D	TAG CORRECTION	5/15/24	

1. STAINLESS STEEL PIN HINGES
2. DUAL STAINLESS STEEL COMPRESSION LATCHES WITH COMMON BAR
3. 1/4" CLEAR LAMINATED SAFETY GLASS GLAZING
4. EPDM GASKET
5. MAGNETIC DOOR LOCKS
6. DOOR STATUS SWITCH
7. 1/2" KNOCKOUT FOR CUSTOMER ELECTRICAL CONNECTION
8. MINIHELIC DIFFERENTIAL PRESSURE GAUGE FOR HEPA FILTER MONITORING (PASCAL SCALE)
9. 220MM BACKWARD CURVED IMPELLER BLOWER 115 VOLTS, 0.88 FLA
10. 18" X 18" X 3-1/2" DOWNSTREAM GEL SEAL HEPA FILTER 99.99% EFFECTIVE ON PARTICLES OF 0.3 MICRONS IN SIZE
11. REMOVABLE PERFORATED 304 STAINLESS STEEL PROTECTIVE HEPA GRILL
12. REMOVABLE 304 PERFORATED STAINLESS STEEL DECK
13. SIDE WALL RETURN AIR CHASE
14. INTERIOR ELECTRICAL CONTROL ACCESS COVER
15. 1-1/2" X 1-1/2" X 16 GA WELDED 304 STAINLESS STEEL FINISHING TRIMS
16. 3/4" FPT CHALLENGE PORT
17. RED/GREEN DOOR LOCK STATUS LIGHTS
18. AIR PURGE CYCLE ON INDICATOR
19. 1 EA. 2 FT INTERIOR CORNER MOUNTED LED LIGHT
20. 3 EA. ADJUSTABLE PERFORATED STAINLESS SHELVES
21. 20 GA SLOPED TOP AND BOTTOM SHIPPED LOOSE FOR FIELD INSTALL
22. 16 GA STAINLESS STEEL SUPPORT GUSSETS SHIPPED LOOSE

DRAWN FOR

CENTRAL DRUG PRODUCTION
ALBERTA HEALTH
EDMONTON, AB

HALCO PRODUCTS COMPANY, INC.
100 NO. GORDON STREET ELK GROVE, IL. 60007

TITLE

PT3048-30/SS/EI/RHC/LED/3SH

DRAWN BY	DK	SIZE	JOB NO. 15821	DWG NO. 152505180	REV D
APPROVED BY		SCALE 1/2"=1'	DATE 5/5/23	SHEET	